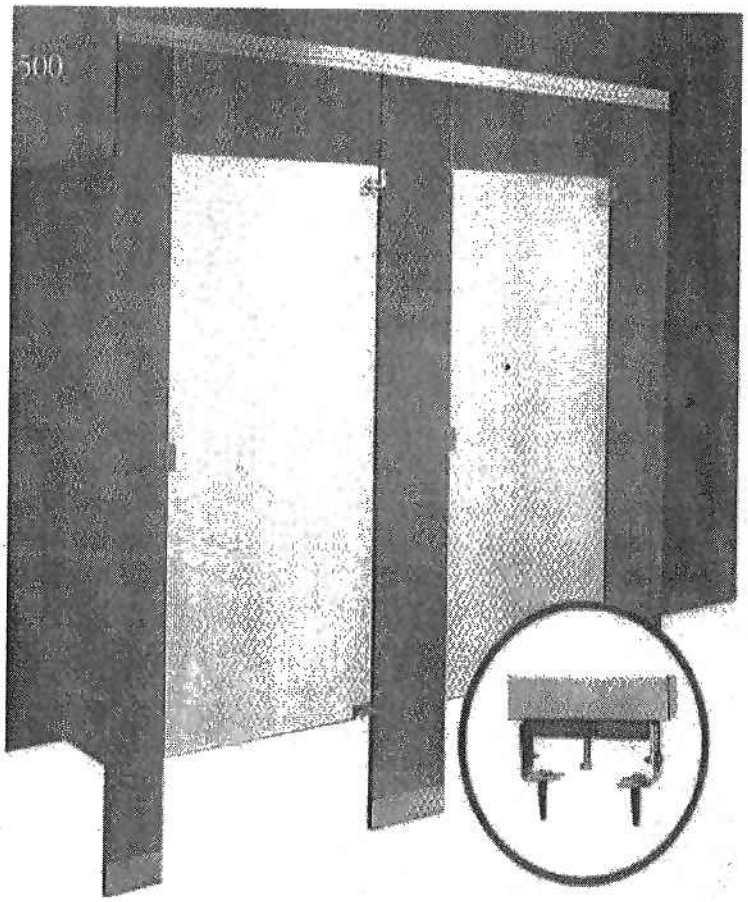

FP500 - *Corinthian* Overhead Braced

Baker MICHAEL BAKER JR. INC. 801 Cromwell Park Drive Suite 110 Glen Burnie, MD 21061	PROJECT TITLE **RESTROOM DESIGN STANDARDS**		PROJECT NO. **TASK 1314.20**
	SHEET TITLE **TOILET PARTITIONS AND DOOR HARDWARE-1**		**B-1**
	SCALE **NONE**	DATE **MARCH 2005**	

STAINLESS STEEL TOILET ENCLOSURES

THE CORINTHIAN **METPAR TYPE: FP-500** **Overhead Braced**

MATERIALS: Stainless Steel Type 304

THICKNESS: Doors..... 22 Gauge, Finished to 1" (25.4mm)

Panels..... 20 Gauge, Finished to 1" (25.4mm)

Pilasters..... 20 Gauge, Finished to 1 ¼" (31.75mm)

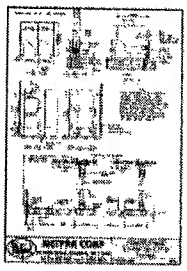

Click on image to full size v the detail

CONSTRUCTION:

Doors:
Finished to 1" (25.4) thick, constructed of two sheets of 22-gauge, type 304 stainless steel formed and cemented under press honeycomb core. Door face sheets are welded at intervals around the entire perimeter. All edges to be finished with a 20-g stainless steel interlocking molding. Corners are finished with pre-formed stainless steel (type 304) reinforcements. Doors s internal steel reinforcements to secure hardware items.

Panels:
Finished to 1" (25.4) thick, constructed of 2 sheets of 20-gauge type 304 stainless steel, formed and cemented under pressur honeycomb core. All partition edges are finished with a 20-gauge stainless steel interlocking molding. Corners will be finish pre-formed stainless steel (type 304) reinforcements.

Pilasters:
Finished to 1¼" (31.75) thick, constructed of two sheets of 20-gauge, type 304 stainless steel, formed and assembled with a honeycomb core. Face sheets are electrically welded at intervals around the entire perimeter. All pilasters will have a 3" (7 #4 finish stainless steel plinth (18-8 type 304) and have straight, flat sides profile with rounded edges to match the pilaster pr Pilasters will have leveling bolts threaded to the pilaster support bracket. Floor mounting will be with #12 x 2½" (63.5) scre shields. Headrail is anodized aluminum .050" (1.27) wall thickness with anti-grip profile. The headrail is set into a 16ga. ch reinforcement which occupies the full width of the pilaster and is electrically welded in place for maximum strength.

FITTINGS:
Wall fittings are die cast chrome plated.

HARDWARE:
Each compartment will be complete with all hardware, door hinges, latch, stop and keeper, coat hook, as well as all necessar and fastenings for a complete installation. Hinges and door strikes are fastened by means of tamper- proof Torx-Pin Head t

bolts, which are polished chrome plated. All other screws to be tamper-proof Torx-PinHead chrome plated. Doors are to be concealed, *"stay-set"*, fully adjustable, non-rising door mechanism.Upper hinge pin shall be 3/8" (9.525) diameter steel. All will have wrap-around flanges with a minimum of 5/8"(15.875) wrap onto pilaster. All doors will have a concealed ADA a slide latch with external *"in-use"* indicator.

FINISH:
All stainless steel material will have a #4 satin finish.

Baker — MICHAEL BAKER JR. INC. 801 Cromwell Park Drive Suite 110 Glen Burnie, MD 21061	PROJECT TITLE: RESTROOM DESIGN STANDARDS		PROJECT NO. TASK 1314.20
	SHEET TITLE: TOILET PARTITIONS AND DOOR HARDWARE-2		B-2
	SCALE: NONE	DATE: MARCH 2005	

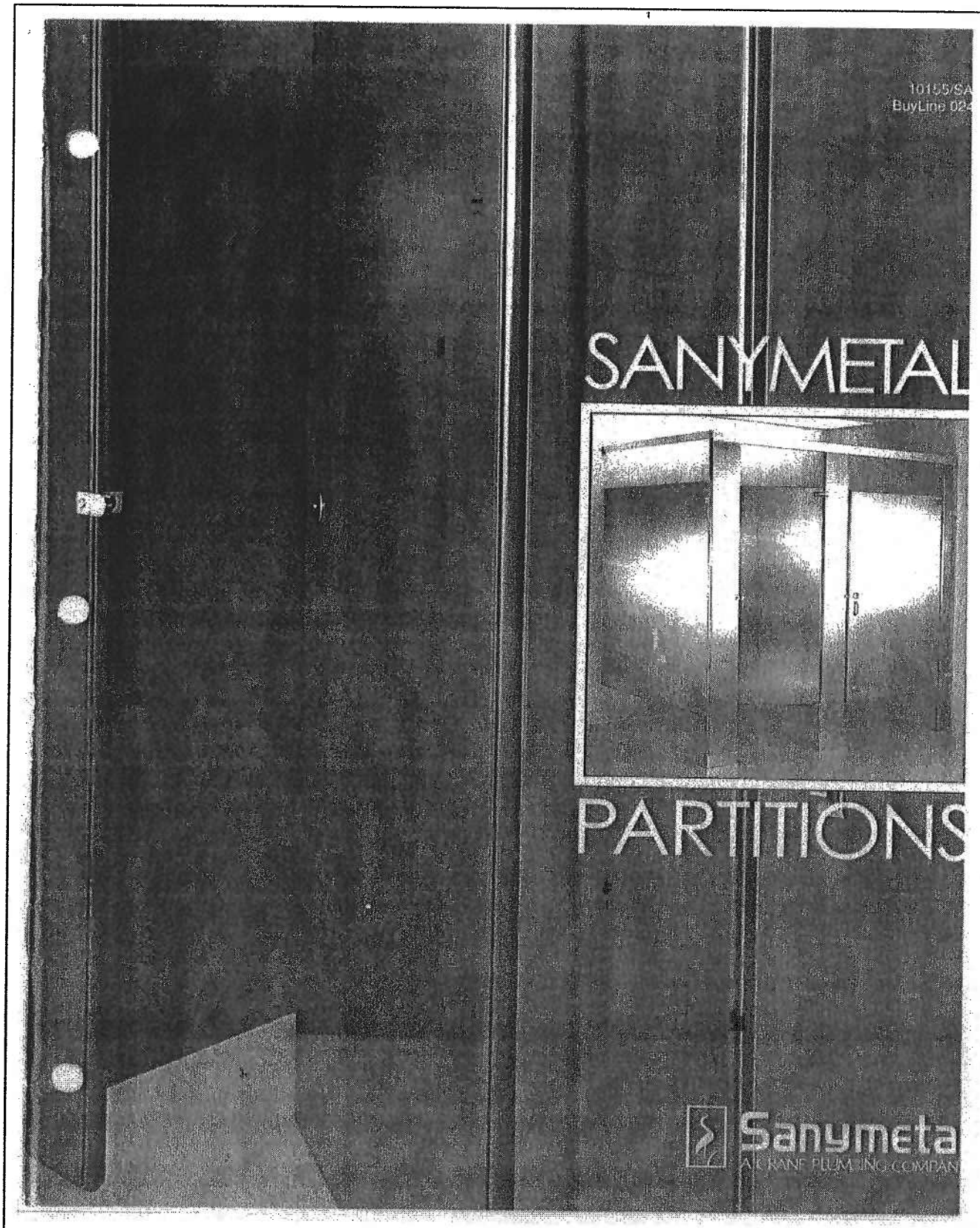

Baker MICHAEL BAKER JR. INC. 801 Cromwell Park Drive Suite 110 Glen Burnie, MD 21061	PROJECT TITLE **RESTROOM DESIGN STANDARDS**		PROJECT NO. **TASK 1314.20**
	SHEET TITLE **TOILET PARTITIONS AND DOOR HARDWARE-3**		**B-3**
	SCALE **NONE**	DATE **MARCH 2005**	

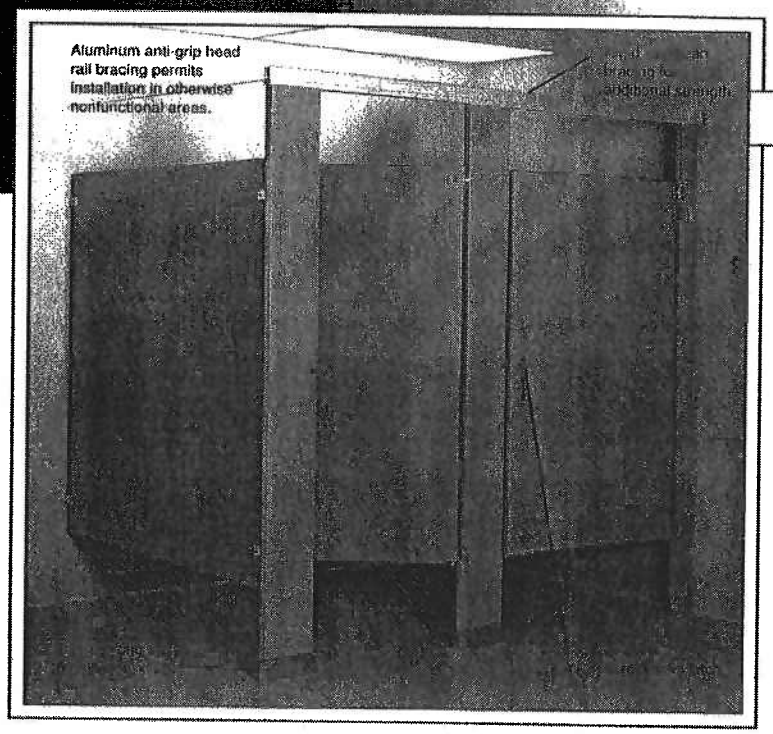

ACADEMY

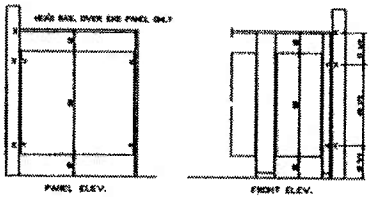

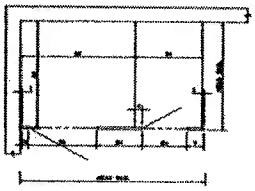

SANYACRYLIC / STAINLESS

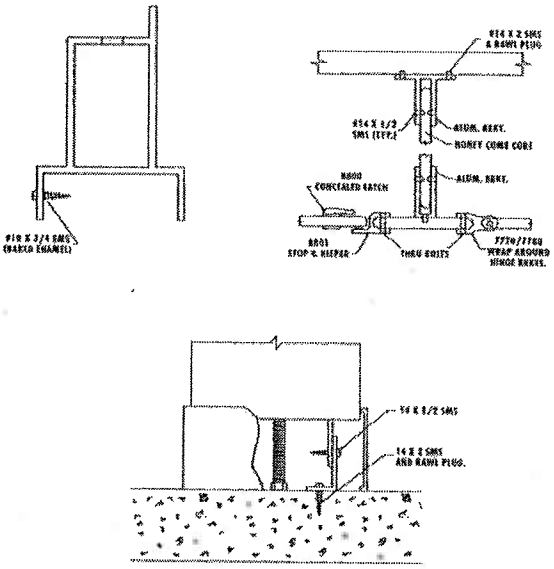

SANYPLASTIC

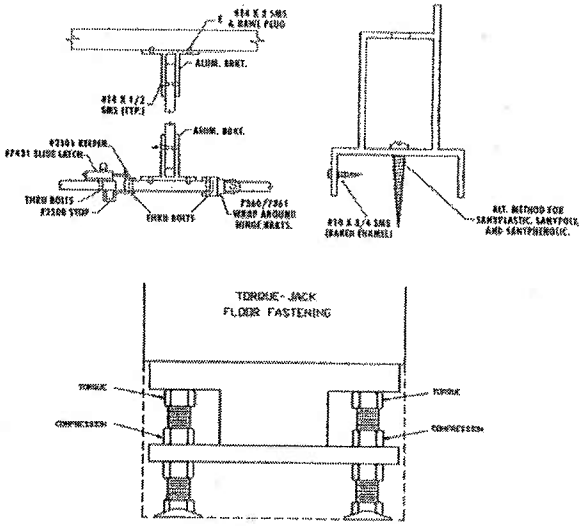

4

Baker MICHAEL BAKER JR. INC. 801 Cromwell Park Drive Suite 110 Glen Burnie, MD 21061	PROJECT TITLE **RESTROOM DESIGN STANDARDS**		PROJECT NO. **TASK 1314.20**
	SHEET TITLE **TOILET PARTITIONS AND DOOR HARDWARE-4**		**B-4**
	SCALE **NONE**	DATE **MARCH 2005**	

SHORT FORM SPECIFICATIONS

Sanymetal offers design opportunity...a method to specify and order the type, materials, colors and combinations to meet your criteria for strength, corrosion resistance, in-place costs and design.

Specify the design type (Section 1), select the material for doors, panels and pilasters from Section 2, 3 and 4. For example: Sanyplastic panels can be installed with steel pilasters.

BAKED ENAMEL

1 TYPE

1: Academy toilet compartments shall be Acrylic Coated Academy type as manufactured by Sanymetal.

Century toilet compartments shall be Acrylic Coated Century type as manufactured by Sanymetal.

Normandie toilet compartments shall be Acrylic Coated Normandie type as manufactured by Sanymetal.

2 DOORS

2: Shall be 1" thick with two sheets of #22 Galvanized-Bonderized steel enclosing sound-deadening Bridgecore. All formed edges shall be welded every 18" and sealed with a surrounding oval-crown locking strip, mitered, welded and finished at the corners.

Standard door size, other than "handicapped" is 24".

3 PANELS

3: Academy, Century and Normandie shall be 1" thick with two sheets of #22 Galvanized-Bonderized steel enclosing sound-deadening Bridgecore. All formed edges shall be welded every 18" and sealed with a surrounding oval-crown locking strip, mitered, welded and finished at the corners.

4 PILASTERS

4: Academy pilasters shall be 1 1/4" thick with two sheets of acrylic coated #20 gauge Galvanized-Bonderized steel welded and finished as specified for Baked Enamel doors. Pilasters bases shall be attached with floor stirrups and leveling bolts to secure for anchorage. Pilaster tops shall be overhead braced the full perimeter of the installation with 1" x 1 1/2" anodized aluminum anti-grip headrail bracing.

Century pilasters shall be 1 1/4" thick with two sheets of #18 gauge, Galvanized-Bonderized steel welded and finished as specified for baked enamel doors. Pilasters to be secured with 3/8" bolts to overhead member (by others) in accordance with details shown on page 6. Not recommended for ceiling heights exceeding 9'0".

Normandie pilasters shall be 1 1/4" thick with two sheets of #18 gauge. Galvanized-Bonderized steel welded and finished as specified for baked enamel doors. Pilasters to be secured with 3/8" bolts and expansion shield in accordance with details shown on page 5.

5 HARDWARE

5: a. Top hinge pins shall be secured at three points with all doors hinge fittings fully flush with face plates of the door.

b. Each door shall be equipped with chrome plated cast alloy coat hook and bumper. Sanymetal concealed latch #8800 with bolt of stainless steel permitting external access, a one piece chrome plated stop and keeper and #7961 concealed controlled power bearing gravity hinge.

c. The door shall be adjustable to permit rest position at any angle within a 270° arc and the weight of all hinges shall be carried by a power bearing with all moving parts concealed within the door thickness

d. Pilaster hinge brackets shall be chrome-plated zamac alloy and tru-bolted to the pilaster.

e. Floor and ceiling connections shall be concealed with a one piece 304 stainless steel theftproof plinth.

f. Chrome-plated zamac stirrup brackets shall be used to attach panels and pilasters.

6 FINISH

6: Finish shall consist of base metal coating and a finish color coat of thermo-setting acrylic enamel applied electrostatically in a pressurized, dust free atmosphere, baked on to produce a uniform, smooth lustrous protective finish.

7 COLOR

7: Colors shall be.....(Sanymetal number and color name) (Any two colors for contrasting pilasters/panels and doors may be specified.)

8 CERTIFICATION

8: A certificate of compliance shall be attesting that all materials are in accordance with Sanymetal's preceding specifications.

STAINLESS STEEL

1 TYPE

1: Academy toilet compartments shall be stainless steel Academy type as manufactured by Sanymetal.

Century toilet compartments shall be stainless steel Century type as manufactured by Sanymetal.

Normandie toilet compartments shall be stainless steel Normandie type as manufactured by Sanymetal.

2 DOORS

2: Shall be 1" thick with two sheets of #22 gauge, 304 18-8 stainless steel enclosing sound-deadening Bridgecore. All formed edges shall be welded every 18" and sealed with a surrounding oval-crown locking strip, mitered, welded and finished at the corners.

Standard door size, other than "handicapped" is 24".

3 PANELS

3: Academy, Century and Normandie shall be 1" thick with two sheets of #22 gauge, 304 18-8 stainless steel enclosing sound-deadening Bridgecore. All formed edges shall be welded every 18" and sealed with a surrounding oval-crown locking strip, mitered, welded and finished at the corners.

4 PILASTERS

4: Academy pilasters shall be 1 1/4" thick with two sheets of #20 gauge, #304 18-8 stainless steel welded and finished as specified for Stainless doors. Pilasters bases shall be attached with floor stirrups and leveling bolts to secure for anchorage. Pilaster tops shall be overhead braced the full perimeter of the installation with 1" x 1 1/2" anodized aluminum anti-grip headrail bracing

Century pilasters shall be 1 1/4" thick with two sheets of #18 gauge, stainless steel welded and finished as specified for Stainless doors. Pilasters to be secured with 3/8" bolts to overhead member (by others) in accordance with details shown on page 6.

Normandie pilasters shall be 1 1/4" thick with two sheets of #18 gauge, stainless steel welded and finished as specified for baked enamel doors. Pilasters to be secured with 3/8" bolts and expansion shield in accordance with details shown on page 5.

5 HARDWARE

5: a. Top hinge pin shall be secured at three points with chrome-plated door hinge fittings fully flush with face plates of the door.

b. Each door shall be equipped with chrome plated cast alloy coat hook and bumper. Sanymetal concealed latch number #8800 with bolt of stainless steel permitting external access, a one-piece chrome plated stop and keeper and number 7961 concealed controlled power bearing gravity hinge.

c. The door shall be adjustable to permit rest position at any angle within a 270° arc and the weight of all hinges be carried by a power bearing with all moving parts concealed within the door thickness.

d. Pilaster hinge brackets shall be chrome-plated zamac alloy and tru-bolted to the pilaster.

e. Floor and ceiling connections shall be concealed with one piece 304 stainless steel theftproof plinth.

f. Chrome-plated zamac stirrup brackets shall be used to attach panels and pilasters.

6 FINISH

6: All stainless steel with shall be #4 finish and shall be paper covered for protection during shipment and installation

7 COLOR

7: Colors shall be 304 stainless steel, #4 finish

8 CERTIFICATION

8: A certificate of compliance shall be attesting that all materials are in accordance with Sanymetal's preceding specifications.

Baker

MICHAEL BAKER JR. INC.
801 Cromwell Park Drive
Suite 110
Glen Burnie, MD 21061

PROJECT TITLE	RESTROOM DESIGN STANDARDS
SHEET TITLE	TOILET PARTITIONS AND DOOR HARDWARE-5
SCALE	NONE
DATE	MARCH 2005
PROJECT NO.	TASK 1314.20
	B-5

stainless steel panels with baked enamel pilasters or normal homogeneous materials can be used depending upon preference.

Possible combinations are virtually unlimited for top performance, durability, lowest maintenance and proven Sanymetal value. Complete specifications available on request.

10155/SAP
BuyLine 0247

SANYPLASTIC	SANYPHENOLIC	SANYPOLY
1: Academy toilet compartments shall be Plastic Laminate Academy type as manufactured by Sanymetal. Century toilet compartments shall be Plastic Laminated Century type as manufactured by Sanymetal. Normandie toilet compartments shall be Plastic Laminated Normandie type as manufactured by Sanymetal.	Academy toilet compartments shall be Solid Phenolic Core (SPC) Academy type as manufactured by Sanymetal. Century not recommended Normandy not recommended	1: Academy toilet compartments shall be Solid Polymer Academy type as manufactured by Sanymetal. Century not recommended Normandy not recommended
2: Shall be constructed of industry Standard plastic laminate NEMA approved, laminated under heat and pressure to a solid 45 lb. density flakeboard core. Finished Doors shall be 1" thick. Standard door size, other than "handicapped" is 24"	2: Shall be 3/4" thick solid phenolic core with high pressure melamine color surface on faces. Edges shall be burnished and slightly rounded. Standard door size, other than "handicapped" is 24".	2: Doors shall be 58" high, 1" thick, single component construction. Solid Polymer. Standard door size, other than "handicapped" is 24".
3: Shall be 3/4" thick and of the same construction, finish and performance standards as for Sanyplastic doors (section 2 above).	3: Academy shall be 1/2" thick solid phenolic core with high pressure color surface on faces. Edges shall be burnished and slightly rounded.	3: Panels shall be 58" high, 1" thick, single component construction. Solid Polymer.
4: Academy pilasters shall be 1 1/4" thick of same construction, finish and performance as for Sanyplastic doors. Pilasters shall be secured to floor by means of a 1/4" thick anchor bar mechanism and shall be secured and leveled by using 3/8" bolts and nuts-tension/compression mounted. Pilasters shall be braced with extruded, anodized aluminum anti-grip headrail and wall return. Century pilasters shall be 1 1/4" thick of the same construction, finish and performance as for Sanyplastic doors. Pilaster shall be secured to overhead support member (furnished by others), by means of 1/4" thick anchor bar mechanism, and shall be secured and leveled by using 3/8" bolts and nuts-tension/compression mounted. Steel core pilasters recommended for ceiling heights exceeding 8'6". Normandie pilasters shall be 1 1/4" thick of same construction, finish and performance as for Sanyplastic doors. Pilasters shall be secured to floor by means of 1/4" thick anchor bar mechanism and shall be secured and leveled by using 3/8" bolts and nuts-tension/compression mounted.	4: Academy shall be 1" thick solid phenolic core with high pressure color surface on faces. Edges shall be burnished and slightly rounded. Headrail shall be heavy duty aluminum extrusions, anodized with anti-grip configuration, and shall be fastened to the pilaster tops.	4: Pilasters shall be 82" high, 1" thick, single component construction, fitted with an 11 gauge stainless steel footer for attachment to min. 3/8" floor studs and expansion shields. Headrail shall be heavy duty aluminum extrusions, anodized with anti-grip configuration, and shall be fastened to the pilaster tops.
5: Doors: Shall be equipped with Sanymetal #6100 top hinge recessed into door 8" from top with pin supported in door above and below top hinge bracket. Lower hinge shall be Sanymetal #6100 controlled power bearing consisting of Zytel cams under spring tension. Door weight shall be carried by power bearing only, not on the cams. Door cycling shall be on a level plane and shall be operable and adjustable to any angle within a 270° arc. Brackets: For panels and pilasters shall be chrome-plated zamac. Operation: A power bearing shall carry the door weight. All moving parts shall be concealed within the 1" door thickness. Accessories: Attachment and Construction. Hinge brackets shall be non-ferrous chrome plated stirrup type attached to the pilaster by means of through bolts. Top hinge bracket shall be Sanymetal #7361, bottom hinge bracket to be Sanymetal #7360. Door keeper and stop shall be Sanymetal, chrome plated No. 2501 keeper and No. 2900 stop with rubber bumper locked into place. Door latch shall be Sanymetal No. 7431 non-ferrous, chrome plated slide latch. Pilaster base shall be 3" high; No. 304 stainless steel, polished finish to conceal floor (or ceiling) connections.	5: Hinges shall be fabricated from 11 gauge stainless steel, one piece leaf, for surface mounting. Hinge shall be equipped with one piece 3/8" stainless steel pintle extending the full height of the hinge. Upper and lower hinge are to both be cam operated, with the one piece pintle: Sanymetal #7280/81. Coat hook and bumper to be stainless steel 14 gauge #7267. Door strike and keeper shall be 14 gauge stainless steel, Sanymetal #7269/7270. Door latch to be slide type, 14 gauge stainless steel, Sanymetal #7231 Bracket for wall and partition attachment shall be 14 gauge stainless steel. Pilasters shall be attached to the floor by means of an 11 gauge stainless steel footer, with provisions for leveling, attached to two 3/8" diameter stainless steel studs set into expansion shields. The floor connection are to be covered by a 4" high stainless steel shoe, #4 finish. Aluminum bracket not available for phenolic material.	5: Hinges shall be fabricated from 11 gauge stainless steel, one piece leaf, for surface mounting. Hinge shall be equipped with one piece 3/8" stainless steel pintle extending the full height of the hinge. Upper and lower hinge are to both be cam operated, with the one piece pintle: Sanymetal #7280/81. Coat hook and bumper to be stainless steel 14 gauge #7267 Door strike and keeper shall be 14 gauge stainless steel Sanymetal #7269/7270. Door latch to be slide type, 14 gauge stainless steel, Sanymetal #7231 Panel brackets to wall pilasters to be heavy duty aluminum, anodized and polished with 3 brackets per connection: (Optional) Full height aluminum brackets with mill finish can be specified if required. Pilaster shoe 4" high stainless steel shoe #4 finish. (Optional) Hechsips to be applied to the bottom edges of panels and doors are available in both aluminum or stainless steel to prevent burning.
6: All units shall be made of Sanyplastic plastic laminate. All wood grain panels larger than 57 1/4" will have horizontal grain, unless vertical splicing is required. 7: Color shall be from current Sanyplastic color section. Any two colors may be combined.	6: Melamine color surface on material face, edges burnished. All wood grain panels larger than 57 1/4" will have horizontal grain. 7: Color shall be selected from the manufacturer's high pressure Sanyplastic color chart, the colors available shall be the same as offered for Sanyplastic partitions.	6: Panels, doors and pilasters shall be fabricated from Polymer resin, which forms a single component section, waterproof and non-absorbent, with a self-lubricating surface. 7: Color shall extend throughout the entire thickness of all the components. Colors shall be selected from the manufacturer's standard polymer colors.
8: A certificate of compliance shall be attesting that all materials are in accordance with Sanymetal's preceding specifications. Use of this product in showers or areas subject to hose-down maintenance is not recommended. Sanymetal recommends rust-proof Phenolic, or Stainless Steel for these environments	8: A certificate of compliance shall be attesting that all materials are in accordance with Sanymetal's preceding specifications.	8: A certificate of compliance shall be attesting that all materials are in accordance with Sanymetal's preceding specifications. Sanymetal provides a one-year warranty against workmanship and defects not against inherent physical characteristics of the solid polymer material such as sagging/warpage due to lack of rigidity.

Note: Sanymetal reserves the right to improve, modify, or change its material and specifications at any time in such a manner as it may consider necessary or advisable, and to discontinue the manufacture and sales of any product without notice.

Baker
MICHAEL BAKER JR. INC.
801 Cromwell Park Drive
Suite 110
Glen Burnie, MD 21061

PROJECT TITLE
RESTROOM DESIGN STANDARDS

SHEET TITLE
TOILET PARTITIONS AND DOOR HARDWARE-6

SCALE **NONE** DATE **MARCH 2005**

PROJECT NO.
TASK 1314.20

B-6

The Mills company offer 3 styles of toilet partitions and 2 styles of urinal screens

Sentinel Overhead Braced

Provides the most economical solution for heavy traffic or vandalism prone areas.

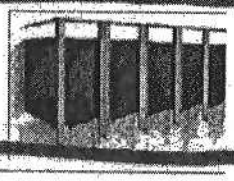

Floor Braced

The floor based compliments design with functional performance. This model is recommended with areas with high ceilings.

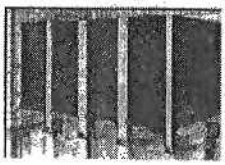

Ceiling Hung

The ceiling hung system is ideal for areas with low ceilings. This models fast and easy maintenance .

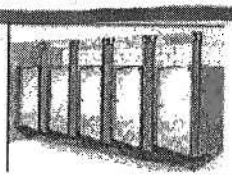

Urinal Screens

These two styles available are wall mount. Available in baked enamel or stainless steel.

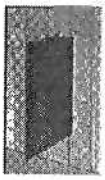

Baker MICHAEL BAKER JR. INC. 801 Cromwell Park Drive Suite 110 Glen Burnie, MD 21061	PROJECT TITLE **RESTROOM DESIGN STANDARDS**		PROJECT NO. **TASK 1314.20**
	SHEET TITLE **TOILET PARTITIONS AND DOOR HARDWARE-7**		**B-7**
	SCALE **NONE**	DATE **MARCH 2005**	

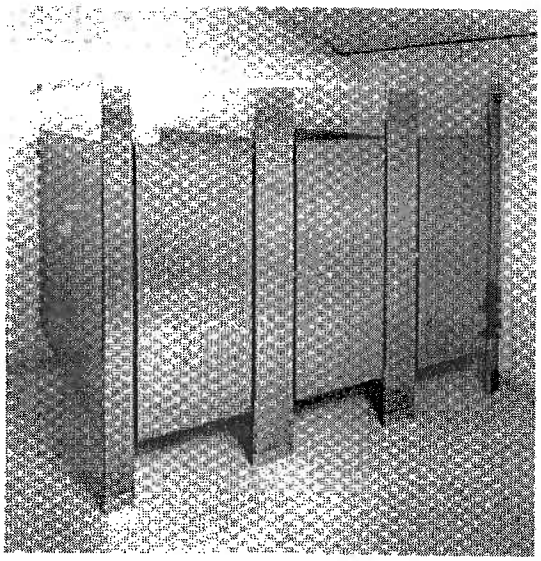

FAST TRACK 48 Hour Shipping
In #4 Satin Finish. Floor Anchored/Overhead Braced, Floor Anchored, and Ceiling Hung. Call for details.

Global Stainless Steel

GLOBAL stainlees steel toilet partitions are virtually indestructible and retain their gleaming beauty indefinitely. These units combine the strength of #304 stainless steel with a #4 stain finish or textured finish, formed and bonded to a honeycomb core. The face sheets are held rigid and permanently in place by an interlocking strip welded at each corner.

GLOBAL stainless steel compontents are impervious to just about any substance. Even scratches caused by deliberate vandalism can be removed by buffing. The elegance of **GLOBAL** stainless steel compontents complements any design scheme, either in new construction or for renovations.

View Specifications/Drawings
Care and Maintenance Instructions

Construction Features

Honeycomb Core is made of cellular honeycomb. This type of core provides strong construction, maximum adhesion, and prevents delamination.

Welded Corners
Corners of panels, pilasters and doors are welded to each other and to the adjacent face sheets.

Theft - Resistant Fasteners
Special driver installs fasteners which virtually eliminates unauthorized removal and ensure easy installation.

Optional Textured Finishes

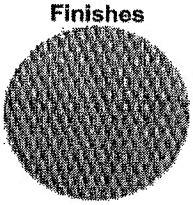

Concealed Latch
With emergency access and ADA lever handle.

Bottom Door Hinge
Gravity-positioning hinge provides safe, durable and maintenance-free support.

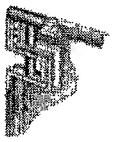

Upper Door Bracket
Bracket is an internal part of the door. A pin goes through the door and bracket for three point bearing and operates in a nylon bushing in upper hinge bracket attached to the pilaster.

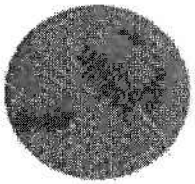

Options:

Plywood Core

No Sight Line

Eastern Style Height

Full Height Aluminum Brackets

Full Height Stainless Steel Brackets

Pilaster Mounting
Pilaster adjustments, with floor-mounted jack-leveling device, are used on Embassy pilasters.

Alternate Pilaster Mounting
This type of mounting is furnished on all Imperial and Regal pilasaters.

Shoe Construction
One-piece stainless steel, type304, with #4 satin finish trim shoes are hemmed top and bottom for rigidity and sleek appearance.

FLOOR ANCHORED/OVERHEAD BRACED TOILET COMPARTMENTS
STAINLESS STEEL – TEXTURED LEATHER GRAIN

GLOBAL STEEL PRODUCTS CORP.

PART-1 GENERAL

1.01 DESCRIPTION

A. Textured leather grain stainless steel compartment work includes the following:
   1. Floor anchored/overhead braced partitions.

B. Furnish all labor and materials necessary for the completion of work in this section as shown on the contract drawings and specified herein.

C. Work in this section shall include but is not limited to:
   1. Toilet compartments
   2. Hardware for toilet compartments
   3. Shop drawings and working drawings
   4. Manufacturer's guarantee

D. Related work specified elsewhere shall include accessories and anchorage/blocking for attachment of compartments.

1.02 PRODUCTS

A. Submittal of shop drawings and details, for architects approval.

B. A sample of textured leather grain finish stainless steel and hardware samples shall be submitted for approval to the architect upon request.

PART-2 PRODUCTS

2.01 MANUFACTURER

A. Toilet compartments to be supplied by Global Steel Products Corp., Deer Park, New York 11729.

2.02 MATERIALS

A. Doors and panels shall be 1" thick, constructed of two sheets of 22-gauge, textured leather grain, stretcher-leveled quality stainless steel formed and bonded under pressure with a non-toxic adhesive to a full-face honeycomb core.

B. Pilasters shall be 1-1/4", constructed of two sheets of 22-gauge, textured leather grain finish stainless steel, formed and bonded under pressure with a non-toxic adhesive to a full-face honeycomb core.

2.03 CONSTRUCTION

A. Doors and panels shall be 1" thick. Panels over 46" shall be manufactured with four (4) face sheets (2) sheets each side, seamed and spot welded together. The edges shall be sealed with a 22-gauge, stainless steel interlocking molding. Molding corners shall be welded to each other and to face sheets, and ground smooth to form a rigid frame around the component.

B. Pilasters shall be 1-1/4" thick. Edges shall be sealed with 22-gauge stainless steel interlocking molding. An inverted stirrup with a jack bolt for leveling during installation and permanent height adjustment shall be welded within the base of each pilaster. "L" brackets shall be coupled to the stirrup bracket and floor for full range adjustment. A shoe shall conceal each mounting, having an internal cross section conforming to the pilaster.

C. Headrail shall be provided to bridge all compartments and brace the end freestanding pilasters to the wall; the headrail to comprise anodized aluminum with satin finish, contoured to provide anti-grip features.

2.04 HARDWARE (NOTE: Refer to the ORDER INFORMATION CONTRACT for specific hardware to be supplied on your order.)

A. All exposed door hardware shall be of chromium-plated diecast Zamac and shall be as noted:
   1. Upper door hinge is recessed and interlocked in door and includes a nylon pin within the plane of the door. Lower door hinge is recessed in door and includes mating box and pintle nylon cams, which provide the bearing surface. The cams are adjusted to allow the door to rest at any position within a 270-degree range.
   2. Door hardware shall include a coat hook, bumper, a stop, keeper, and a concealed latch with emergency access.
   3. Fasteners shall be of chrome-plated steel; door hinges will be mounted with theft-proof barrel nuts and machine screws; hooks and handles will be mounted with theft-proof, full-thread screws.

B. Wall brackets shall be secured to walls with anchoring and/or expansion shields.

C. Pilaster shoes shall be of type 304 stainless steel having a #4 finish.

PART-3 EXECUTION

3.01 PREPARATION

A. Examine areas to receive toilet compartments for correct height and spacing of anchorage/blocking and plumbing fixtures that may affect installation of compartments. Report any discrepancies to the architect.

B. Take complete and accurate measurements of complete toilet compartment locations.

C. Start of work constitutes acceptance of job.

3.02 INSTALLATION

A. Install compartments in a rigid, straight, plumb and level manner as shown on the shop drawings and manufacturer's installation instructions.

B. All doors and panels to be mounted at 12" above the finished floor unless otherwise specified.

D. Clearance at vertical edges of door shall be uniform top to bottom.

E. No evidence of cutting, drilling and/or patching shall be visible on the finished work.

F. Finished surfaces shall be cleaned after installation and be left free of all imperfections.

3.03 WARRANTY

A. Global Steel Products Corp. guarantees its textured leather grain stainless steel units, properly maintained, against corrosion or discoloration for 5 years from the date of receipt by the customer. If materials are found defective during that period for the reasons listed above, the material will be replaced free of charge. No credits or allowances will be issued for any labor or expenses relating to the replacement of components covered under the warranty plan. All such expenses are to be borne by the buyer.

2.17

Baker
MICHAEL BAKER JR. INC.
801 Cromwell Park Drive
Suite 110
Glen Burnie, MD 21061

PROJECT TITLE	PROJECT NO.
RESTROOM DESIGN STANDARDS	TASK 1314.20
SHEET TITLE: TOILET PARTITIONS AND DOOR HARDWARE-9	B-9
SCALE: NONE / DATE: MARCH 2005	

GLOBAL STEEL PRODUCTS CORP.

FLOOR ANCHORED/OVERHEAD BRACED
STAINLESS STEEL
TEXTURED LEATHER GRAIN

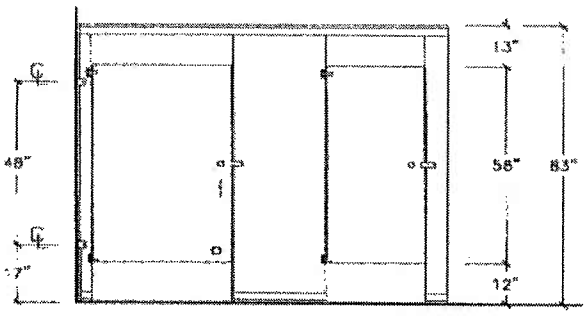

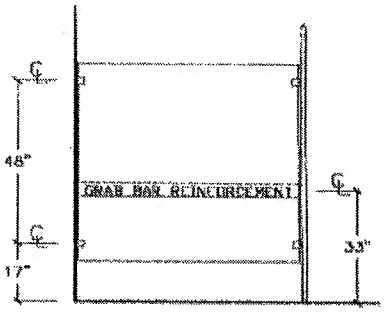

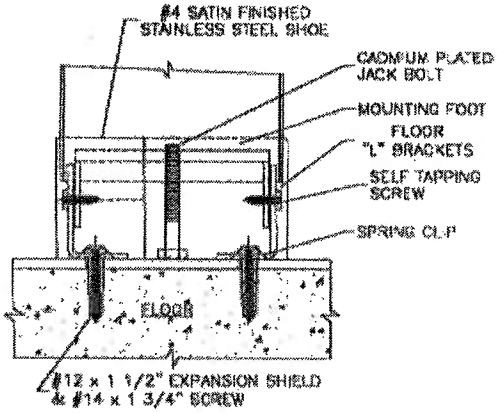

FLOOR ANCHORING DETAIL

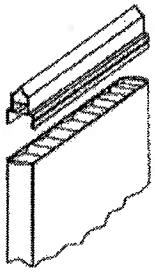

HEADRAIL DETAIL

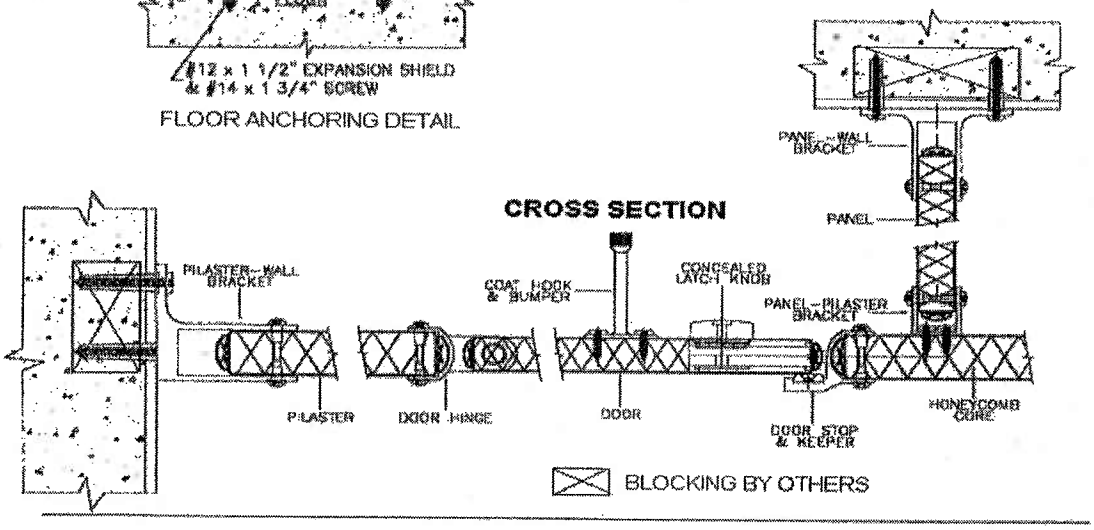

CROSS SECTION

2.18

95 Marcus Blvd., Deer Park, New York 11729 Phone: 631-586-3330 Fax: 631-586-3455
Website: www.globalpartitions.com email: sales@globalpartitions.com

Baker — MICHAEL BAKER JR. INC. 801 Cromwell Park Drive Suite 110 Glen Burnie, MD 21061	PROJECT TITLE: RESTROOM DESIGN STANDARDS		PROJECT NO. TASK 1314.20
	SHEET TITLE: TOILET PARTITIONS AND DOOR HARDWARE-10		B-10
	SCALE: NONE	DATE: MARCH 2005	

Our Commitment to Your Satisfaction

For over 50 years, Jacknob has been supplying the highest quality partition hardware and washroom accessories. Manufacturing over 2,400 standard items, as well as a wide range of specialty and private label components, has given us experience and production capabilities unmatched in the industry.

Complete tooling and up-to-date production facilities integrated with our computerized ordering & inventory systems provide efficient service and fast delivery.

We're proud our growing list of clients and welcome every opportunity to justify our reputation for customer satisfaction. If you have any questions concerning a hardware application or suitability of a particular component, please feel free to call.

STALL LAYOUT
INSWING HARDWARE AND REPLACEMENT PAKS
OUTSWING HARDWARE AND REPLACEMENT PAKS
INSWING HARDWARE SURFACE MOUNTED HINGES
OUTSWING HARDWARE SURFACE MOUNTED HINGES
PREPACKAGED PANEL AND PILASTER POST PAKS
PREPACKAGED ALCOVE, URINAL, ANGLE, AND HEADRAIL PAKS
CAST WALL BRACKETS
STAMPED AND EXTRUDED WALL BRACKETS
DOUBLE HIGH AND CONTIUOUS WALL BRACKETS
SURFACE MOUNTED HINGES
STRIKE AND KEEPERS FOR SQUARE PILASTER POSTS
STRIKE AND KEEPERS FOR ROUND PILASTER POSTS AND STAMPED STAINLESS STEEL STRIKE AND KEEPERS
TOP PIVOT HINGES
BOTTOM PIVOT HINGES
DOOR HOOKS, PULLS AND STOPS. SLIDE AND THROW LATCHES. CONVERSION KITS FOR CONCEALED LATCHES
CONCEALED LATCHES AND KNOBS
PILASTER SHOES AND ANCHORING DEVICES
PILASTER ANCHOR PAKS
TOP AND BOTTOM DOOR INSERTS
ALCOVE CLIPS,HEADRAIL BRACKETS, END PLUGS, AND PAKS
PINTLES, CAMS PINS, AND CANDLE CAMS
PAPER ROLL HOLDERS AND CURTAIN ROD HOLDERS
SCREW PAKS AND ASSORTED FASTENERS
SHEET METAL SCREWS AND ASSORTED FASTENERS

ADA Compliance Hardware & Accessories

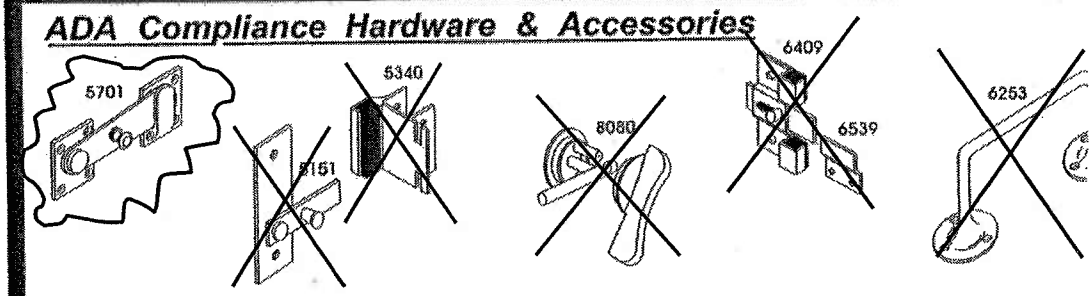

About ADA Compliance -

The American Disabilities Act (ADA) of 1992 was enacted to make accessible all areas of public, municipal and commercial buildings to the physically challenged. Public lavatories and restrooms require special consideration to comply with these new and vigorously enforced regulations. The Jacknob Corp. has placed specific emphasis on thoroughly understanding and providing the correct hardware and washroom accessories to satisfy these new laws, and is ready to supply what you need to come up to code. While our hardware and accessories meet or exceed the new ADA guidelines, we do indemnify ourselves as corporate and individual entities against situations of installation and actions of others as beyond our control.

Tel: 631-231-9

© Entire Contents Copyright 2000 by

Baker

MICHAEL BAKER JR. INC.
801 Cromwell Park Drive
Suite 110
Glen Burnie, MD 21061

PROJECT TITLE: RESTROOM DESIGN STANDARDS		PROJECT NO. TASK 1314.20
SHEET TITLE: TOILET PARTITIONS AND DOOR HARDWARE-11		B-11
SCALE: NONE	DATE: MARCH 2005	

TP HINGES

toilet

- **Continuous Partition Hinges are Durable** - Add years of maintenance-free operation to any partition system.
- **Support Partition Doors Along Their Entire Length** - Markar TP Hinges run the complete length of the door to distribute weight evenly.
- **Add Rigidity to Ceiling Hung Partitions** - Projects that require this type of mounting procedure need the added support given by the TP Hinge.
- **Eliminate Open "Sight-Lines"** - Continuous hinge surfaces maximize privacy by eliminating visual intrusion. There are no openings along the hinge.
- **Ideal for Damp or Corrosive Environments** - Fabricated from heavy-duty 14 gauge 304 stainless steel or 6463-T5 anodized aluminum.
- **Adjustable Spring-Loaded Hinges** - Torx Tip Cap adjusts the internal mechanism to close the partition door tightly, or to keep the door open to show vacancy.
- **Left or Right-Handed** - All partition hinges can be used on either side of the door.

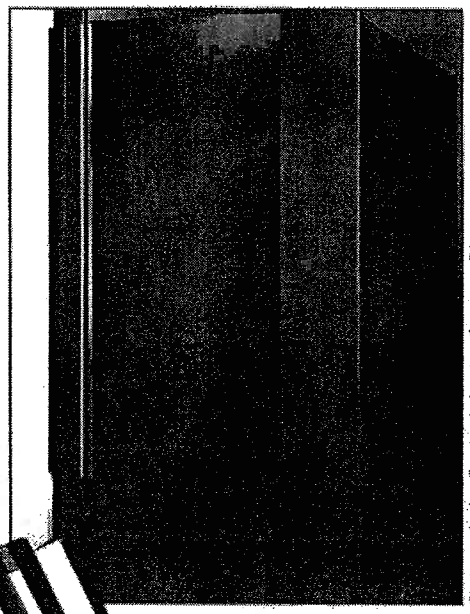

Photographed at Comtec Industries, Scranton, PA

TP Continuous Pin and Barrel type hinges have been engineered to withstand the extraordinary abuse and heavy traffic associated with toilet partition doors. Various models, designed to be function-specific, are constructed from heavy gauge stainless steel or aluminum. Markar Continuous Hinges distribute door weight and stress along the entire length of the door, so partition doors operate dependably year after year. Maintenance expense is dramatically reduced.

In addition to their strength and durability, TP Hinges provide important benefits. When less expensive multi-part hinge systems are used on partitions, they leave a gap along the door "sight-line", thus exposing the occupant. Markar's Continuous Hinge alternatives have twenty-eight bearing surfaces which eliminate the gap or sight-line completely.

To comply with ADA requirements many TP Hinge models are available with internal spring mechanisms. The adjustable Torx Tip Cap included with spring-loaded hinges permits the door to swing either fully closed or to a predetermined position.

To help prevent vandalism, certain models include a tamper-resistant Finishing Cover Cap that conceals all mounting hardware. TP Hinges provide safety and security while giving the toilet partition a clean appearance. For data on specific models, please request Data Sheet Series TP Hinge.

Torx Tip Cap shown with adjusting tools and setting pins.

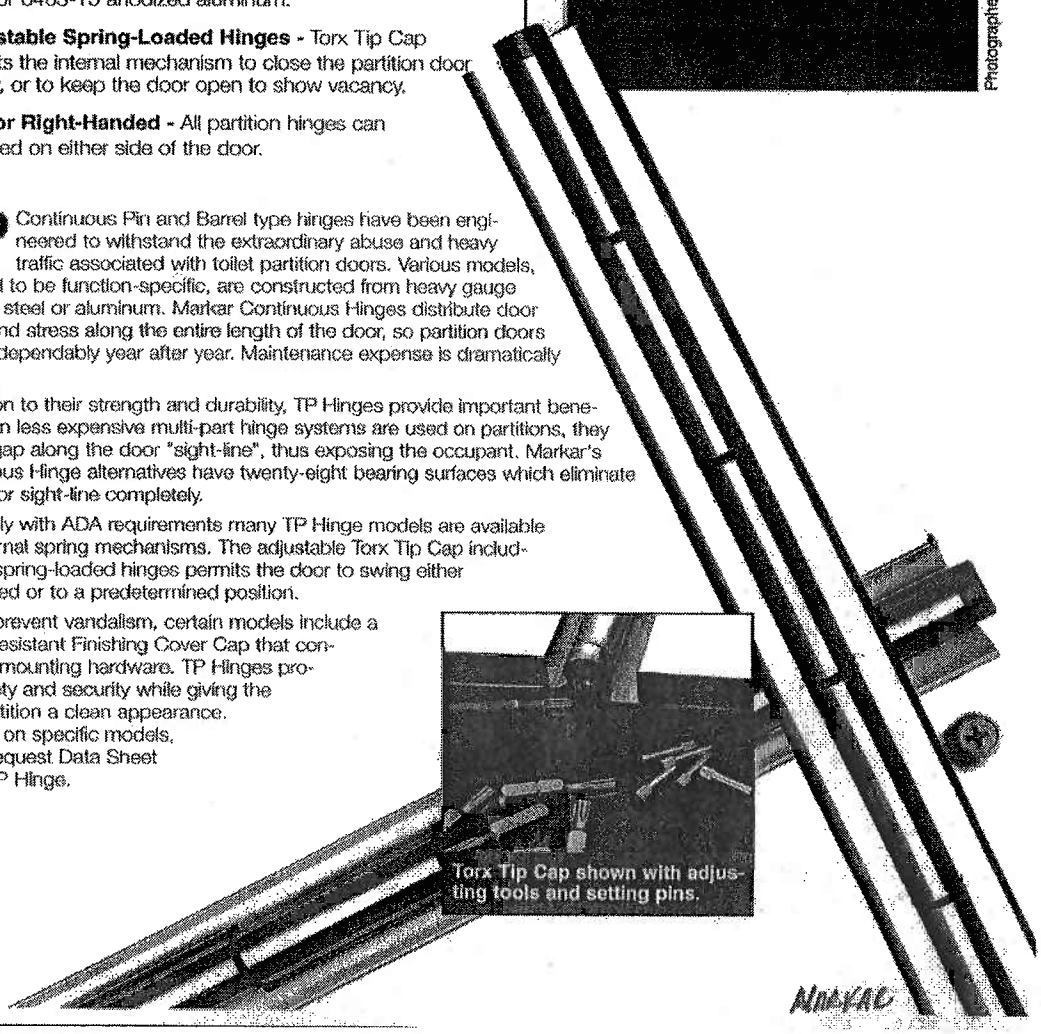

Baker MICHAEL BAKER JR. INC. 801 Cromwell Park Drive Suite 110 Glen Burnie, MD 21061	PROJECT TITLE RESTROOM DESIGN STANDARDS		PROJECT NO. TASK 1314.20
	SHEET TITLE TOILET PARTITIONS AND DOOR HARDWARE-12		B-12
	SCALE NONE	DATE MARCH 2005	

TP HINGES
toilet

Edge Mount

FM-900-TP Spring-Loaded
FM-500-TP Edge Mount

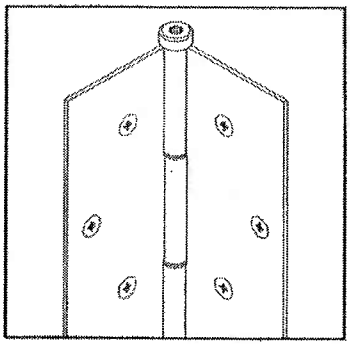

Ideal for use in damp or corrosive environments, this hinge was designed for 1-3/4" stainless steel doors and frames. The addition of optional tamper proof security screws make this an excellent hinge for abusive traffic.

Standard Features

Material
Heavy-duty 14 gauge 304 stainless steel.

Finishes
US 32D satin stainless steel (630).

Pin and Barrel Type Hinge
- 1/4" diameter stainless steel pin.
- Long-life split nylon bearings.
- 28 bearing surfaces.

Torx Adjusting Screw
(with Spring Loaded hinges only)
- Torx tip cap.
- Internal stainless steel spring mechanism.
- Adjust tension on door to close tightly for out-swinging ADA compliance.
- Allows door to stay open in predetermined position.

Mounting Hardware
- 10-24 flat head stainless steel machine screws.
- No exposed mounting hardware.

Capacity
Supports weights up to 80 lbs.

Sizes
54" and 57"

Non-Handed
Use the same hinge for right or left handed doors.

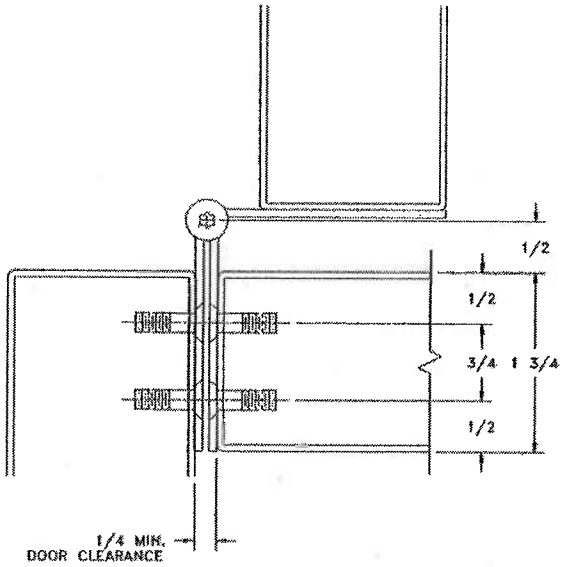

Optional Features

- US 32 bright polished stainless steel (629).
- 84 powder coated paint colors.
- Custom lengths (in inches).
- Custom hole pattern.
- Tamper-proof security screws.

Markar Products, Inc.

68 Ward Road • Lancaster, NY 14086 • 716-685-4104 • Toll Free: 1-800-866-1888 • Fax: 716-685-3919

Baker — MICHAEL BAKER JR. INC. 801 Cromwell Park Drive Suite 110 Glen Burnie, MD 21061	PROJECT TITLE: RESTROOM DESIGN STANDARDS		PROJECT NO. TASK 1314.20
	SHEET TITLE: TOILET PARTITIONS AND DOOR HARDWARE-13		B-13
	SCALE: NONE	DATE: MARCH 2005	

TP HINGES
toilet

Full Surface

FS-901-TP 1/8" Offset Spring-Loaded
FS-501-TP 1/8" Offset

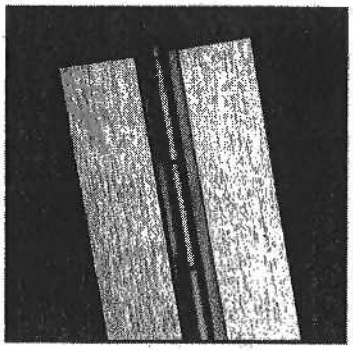

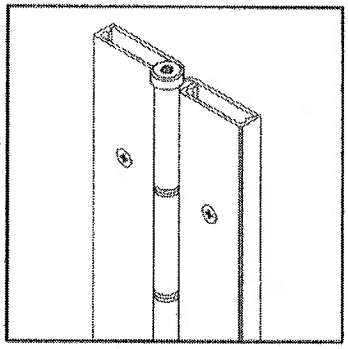

This hinge is to be used with a 1-1/4" pilaster and 1" door assembly. Stainless steel continuous toilet partitions are excellent for retrofit or constructing a new facility, where a high volume of abusive traffic can be found.

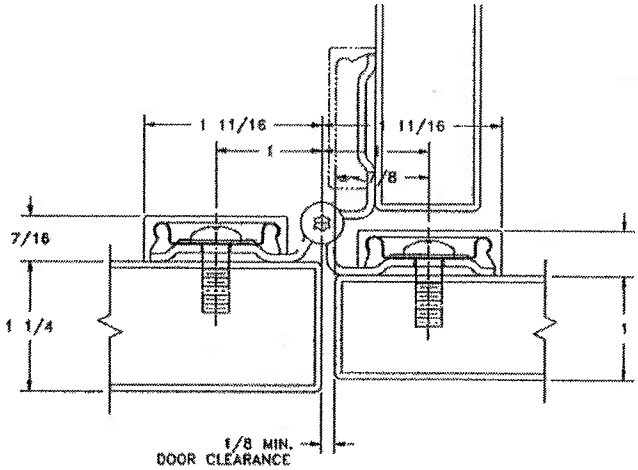

Standard Features

Material
Heavy-duty 14 gauge 304 stainless steel.

Finishes
US 32D brushed stainless steel (630).

Pin and Barrel Type Hinge
- 1/4" diameter stainless steel pin.
- Long-life split nylon bearings.
- 28 bearing surfaces.

Torx Adjusting Screw
(with Spring-Loaded hinges only)
- Torx tip cap.
- Internal stainless steel spring mechanism.
- Adjust tension on door to close tightly for out-swinging ADA compliance.
- Allows door to stay open in predetermined position.

Mounting Hardware
- 1/4 20 pan head machine screws.
- Cover caps conceal all mounting hardware.

Capacity
Supports weights up to 80 lbs.

Sizes
54" and 57"

Non-Handed
Use the same hinge for right or left handed doors.

Optional Features

- 84 powder coated paint colors
- Custom lengths (in inches).
- Custom hole pattern.
- Tamper-proof security screws.

Markar Products, Inc.

68 Ward Road • Lancaster, NY 14086 • 716-685-4104 • Toll Free: 1-800-866-1688 • Fax: 716-685-3919

Baker — MICHAEL BAKER JR. INC., 801 Cromwell Park Drive, Suite 110, Glen Burnie, MD 21061	PROJECT TITLE: RESTROOM DESIGN STANDARDS		PROJECT NO. TASK 1314.20
	SHEET TITLE: TOILET PARTITIONS AND DOOR HARDWARE-14		B-14
	SCALE: NONE	DATE: MARCH 2005	

TP HINGES
toilet

Full Surface

FS-902-TP Flush Spring-Loaded
FS-502-TP Flush

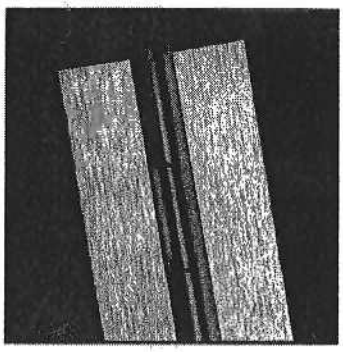

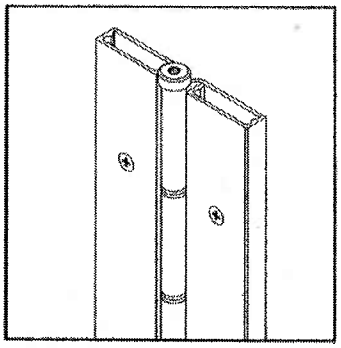

For pilasters and doors that are flush with each other, this style of hinge is excellent. Stainless steel continuous toilet partition hinges are just right for retrofit or constructing a new facility, where a high volume of abusive traffic can be found.

Standard Features

Material
Heavy-duty 14 gauge 304 stainless steel.

Finishes
US 32D brushed stainless steel (630).

Pin and Barrel Type Hinge
- 1/4" diameter stainless steel pin.
- Long-life split nylon bearings.
- 28 bearing surfaces.

Torx Adjusting Screw
(with Spring-Loaded hinges only)
- Torx tip cap.
- Internal stainless steel spring mechanism.
- Adjust tension on door to close tightly for out-swinging ADA compliance.
- Allows door to stay open in predetermined position.

Mounting Hardware
- 1/4 20 pan head machine screws.
- Cover caps conceal all mounting hardware.

Capacity
Supports weights up to 80 lbs.

Sizes
54" and 57"

Non-Handed
Use the same hinge for right or left handed doors.

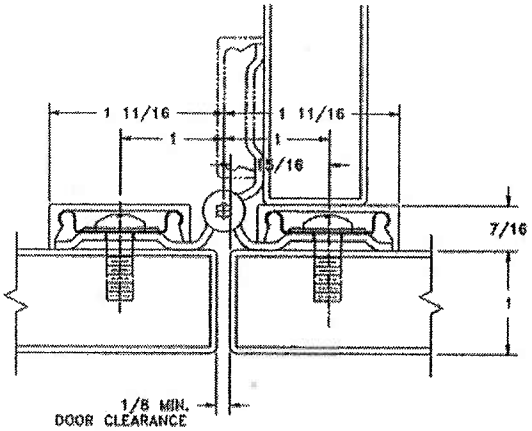

Optional Features

- 84 powder coated paint colors
- Custom lengths (in inches).
- Custom hole pattern.
- Tamper-proof security screws.

Markar Products, Inc.

68 Ward Road • Lancaster, NY 14086 • 716-685-4104 • Toll Free: 1-800-866-1688 • Fax: 716-685-3019

Baker — MICHAEL BAKER JR. INC., 801 Cromwell Park Drive, Suite 110, Glen Burnie, MD 21061	PROJECT TITLE: RESTROOM DESIGN STANDARDS		PROJECT NO. TASK 1314.20
	SHEET TITLE: TOILET PARTITIONS AND DOOR HARDWARE-15		B-15
	SCALE: NONE	DATE: MARCH 2005	

TP HINGES
toilet

Hinge Guard

HG-906-TP 1/8" Offset Spring-Loaded
HG-506-TP 1/8" Offset

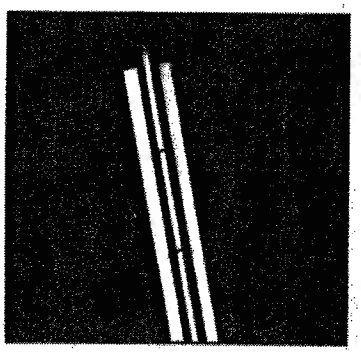

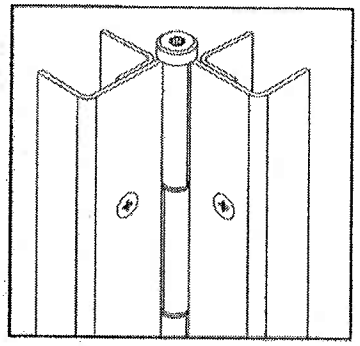

Ideal for use with corrian or marble type partitions with 1-1/4" pilaster and 1" door. This hinge provides door and pilaster edge protection and is adjustable with optional AdjustaScrew fasteners for 1/2" width correction.

Standard Features

Material
Heavy-duty 14 gauge 304 stainless steel.

Finishes
US 32D satin stainless steel (630).

Pin and Barrel Type Hinge
- 1/4" diameter stainless steel pin.
- Long-life split nylon bearings.
- 28 bearing surfaces.

Torx Adjusting Screw
(with Spring-Loaded hinges only)
- Torx tip cap.
- Internal stainless steel spring mechanism.
- Adjust tension on door to close tightly for out-swinging ADA compliance.
- Allows door to stay open in predetermined position.

Mounting Hardware
No exposed mounting hardware.

Capacity
Supports weights up to 80 lbs.

Sizes
54" and 57"

Non-Handed
Use the same hinge for right or left handed doors.

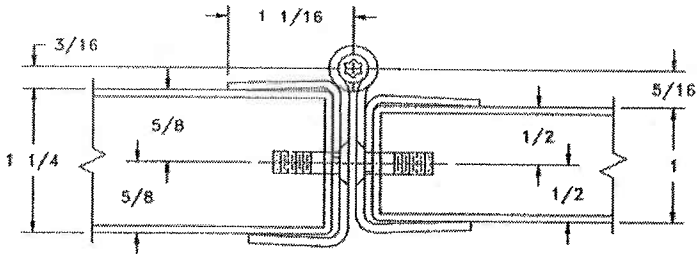

Optional Features

- US 32 bright polished stainless steel (629).
- 84 powder coated paint colors
- Custom lengths (in inches).
- Custom hole pattern.
- Tamper-proof security screws.
- AdjustaScrew for corrections of door fit problems up to 1/2".

Markar Products, Inc.

68 Ward Road • Lancaster, NY 14086 • 716-685-4104 • Toll Free: 1-800-666-1688 • Fax: 716-685-3919

TP HINGES
toilet

Hinge Guard

HG-907-TP Flush Spring-Loaded
HG-507-TP Flush

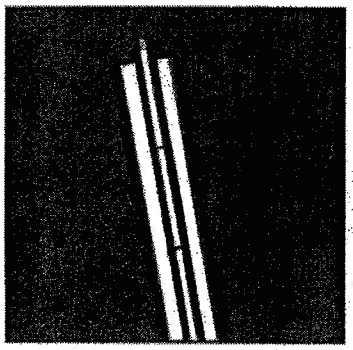

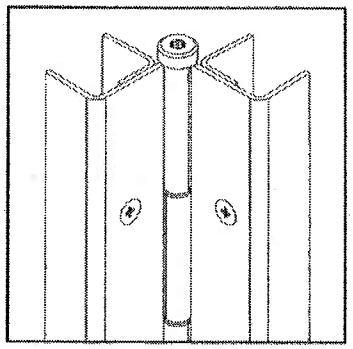

Ideal for use with corrian or marble type partitions, the slim, clean design provides door and pilaster edge protection. This hinge is also adjustable with optional AdjustaScrew fasteners for 1/2" width correction.

Standard Features

Material
Heavy-duty 14 gauge 304 stainless steel.

Finishes
US 32D satin stainless steel (630).

Pin and Barrel Type Hinge
- 1/4" diameter stainless steel pin.
- Long-life split nylon bearings.
- 28 bearing surfaces.

Torx Adjusting Screw
(with Spring-Loaded hinges only)
- Torx tip cap.
- Internal stainless steel spring mechanism.
- Adjust tension on door to close tightly for out-swinging ADA compliance.
- Allows door to stay open in predetermined position.

Mounting Hardware
No exposed mounting hardware.

Capacity
Supports weights up to 80 lbs.

Sizes
54" and 57"

Non-Handed
Use the same hinge for right or left handed doors.

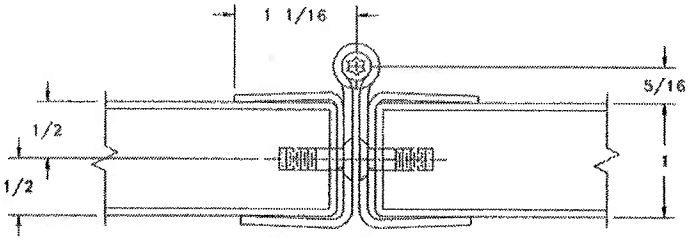

Optional Features

- US 32 bright polished stainless steel (629).
- 84 powder coated paint colors
- Custom lengths (in inches).
- Custom hole pattern.
- Tamper-proof security screws.
- AdjustaScrew for corrections of door fit problems up to 1/2".

Markar Products, Inc.

68 Ward Road • Lancaster, NY 14086 • 716-685-4104 • Toll Free: 1-800-866-1668 • Fax: 716-685-3919

Baker — MICHAEL BAKER JR. INC. 801 Cromwell Park Drive Suite 110 Glen Burnie, MD 21061	PROJECT TITLE: RESTROOM DESIGN STANDARDS		PROJECT NO. TASK 1314.20
	SHEET TITLE: TOILET PARTITIONS AND DOOR HARDWARE-17		B-17
	SCALE: NONE	DATE: MARCH 2005	

TP HINGES
toilet

Full Surface

FS-910-TP Flush Spring-Loaded
FS-510-TP Flush

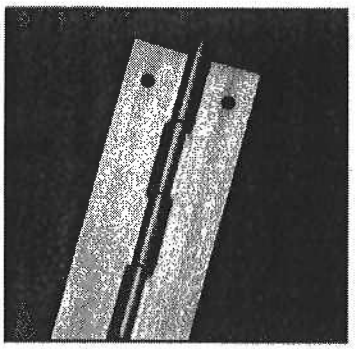

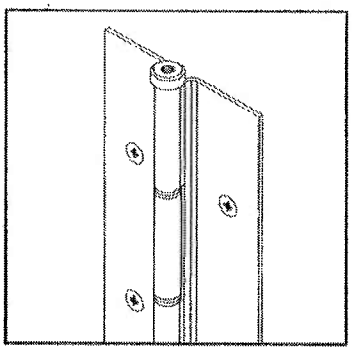

This hinge was designed for detention facilities or areas where vandalism is common. The hinge can be mechanically fastened or welded in place for optimum security.

Standard Features

Material
Heavy-duty 14 gauge 304 stainless steel.

Finishes
US 32D brushed stainless steel (630).

Pin and Barrel Type Hinge
- 1/4" diameter stainless steel pin.
- Long-life split nylon bearings.
- 28 bearing surfaces.

Torx Adjusting Screw
(with Spring-Loaded hinges only)
- Torx tip cap.
- Internal stainless steel spring mechanism.
- Adjust tension on door to close tightly for out-swinging ADA compliance.
- Allows door to stay open in predetermined position.

Mounting Hardware
10-24 flat head stainless steel machine screws.

Capacity
Supports weights up to 80 lbs.

Sizes
54" and 57"

Non-Handed
Use the same hinge for right or left handed doors.

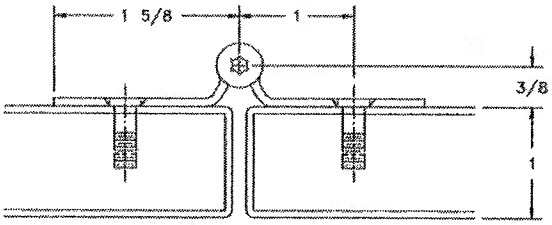

Optional Features

- US 32 bright polished stainless steel (629).
- 84 powder coated paint colors
- Custom lengths (in inches).
- Custom hole pattern.
- Tamper-proof security screws.
- One way shoulder bolt and screws.

Markar Products, Inc.

68 Ward Road • Lancaster, NY 14086 • 716-685-4104 • Toll Free: 1-800-866-1668 • Fax: 716-685-3919

Baker — MICHAEL BAKER JR. INC. 801 Cromwell Park Drive Suite 110 Glen Burnie, MD 21061	PROJECT TITLE: RESTROOM DESIGN STANDARDS		PROJECT NO. TASK 1314.20
	SHEET TITLE: TOILET PARTITIONS AND DOOR HARDWARE-18		B-18
	SCALE: NONE	DATE: MARCH 2005	

TECHNICAL MEMO

400 SERIES TOILET PARTITION SAFETY LIFT FEATURE

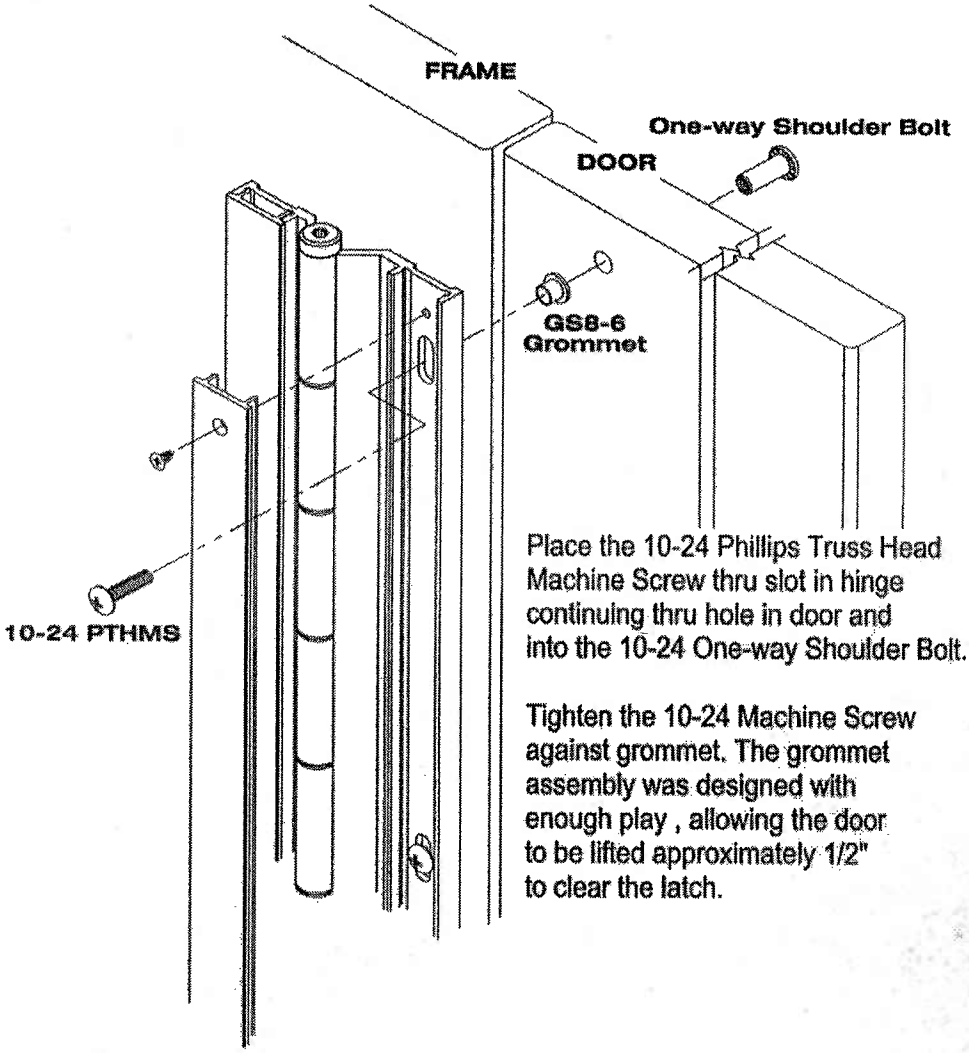

Place the 10-24 Phillips Truss Head Machine Screw thru slot in hinge continuing thru hole in door and into the 10-24 One-way Shoulder Bolt.

Tighten the 10-24 Machine Screw against grommet. The grommet assembly was designed with enough play , allowing the door to be lifted approximately 1/2" to clear the latch.

4/99 For more information contact:
Markar Products, Inc. 68 WARD ROAD LANCASTER, NEW YORK 14086 1-800-868-1688 (716) 685-4104 FAX (716) 685-3919

Baker — MICHAEL BAKER JR. INC. 801 Cromwell Park Drive Suite 110 Glen Burnie, MD 21061	PROJECT TITLE: RESTROOM DESIGN STANDARDS		PROJECT NO. TASK 1314.20
	SHEET TITLE: TOILET PARTITIONS AND DOOR HARDWARE-19		B-19
	SCALE: NONE	DATE: MARCH 2005	

TECHNICAL MEMO

STRENGTH OF COMPONENTS

12 GAUGE STAINLESS STEEL CONTINUOUS HINGES

Leaves

Material: 12gauge 304 stainless steel
Tension: 85,000 P.S.I.
Shear: 35,000 P.S.I.

Stress Analysis

The center of gravity of a door of uniform construction is located half-way between the top and bottom and half-way from edge to edge. The forces acting on the hinge are tensile and shear in the top half of the door and compression and shear in the bottom half. The leaf is 0.109 inches thick, so the cross-sectional area resisting tensile stresses is 4.5 in² for a 7-foot hinge and 6.5 in² for a 10-foot hinge.

Tensile Limits

7' door 4.5 in²
x 85,000 P.S.I. = 385,075 lbs
+ 12 (safety factor) = 32,100 lbs

8' door 5.0 in²
x 85,000 P.S.I. = 440,675 lbs
+ 12 (safety factor) = 36,725 lbs

10' door 6.5 in²
x 85,000 P.S.I. = 551,850 lbs
+ 12 (safety factor) = 46,000 lbs

Shear Limits

7' door 9.0 in²
x 35,000 P.S.I. = 317,125 lbs
+ 12 (safety factor) = 26,425 lbs

8' door 10.25 in²
x 35,000 P.S.I. = 551,850 lbs
+ 12 (safety factor) = 46,000 lbs

10' door 13.0 in²
x 35,000 P.S.I. = 454,450 lbs
+ 12 (safety factor) = 37,875 lbs

Fasteners

Type: 10-24 machine screw
Material: 1035 cold rolled steel
Tension: 83,000 P.S.I.
Area: 0.0145 in²

7' hinge 16 fasteners
x 0.0145 in² = 0.232 in²
x 83,000 P.S.I. = 19,256 lbs
+ 12 (safety factor)= 1,604 lbs

8' hinge 18 fasteners
x 0.0145 in² = 0.261 in²
x 83,000 P.S.I. = 21,663 lbs
+ 12 (safety factor)= 1,805 lbs

10' hinge 20 fasteners
x 0.0145 in² = 0.290 in²
x 83,000 P.S.I. = 24,070 lbs
+ 12 (safety factor)= 2,005 lbs

Type: 1/4-20 machine screw
Material: 1035 cold rolled steel
Tension: 83,000 P.S.I.
Area: 0.0269 in²

7' hinge 16 fasteners
x 0.0269 in² = 0.430 in²
x 83,000 P.S.I. = 35,723 lbs
+ 12 (safety factor)= 2,977 lbs

8' hinge 18 fasteners
x 0.0269 in² = 0.484 in²
x 83,000 P.S.I. = 40,189 lbs
+ 12 (safety factor)= 3,349 lbs

10' hinge 20 fasteners
x 0.0269 in² = 0.538 in²
x 83,000 P.S.I. = 44,654 lbs
+ 12 (safety factor)= 3,721 lbs

4/99 For more information contact:
Markar Products, Inc. 68 WARD ROAD LANCASTER, NEW YORK 14086 1-800-866-1698 (716) 685-4104 FAX (716) 685-3919

Baker — MICHAEL BAKER JR. INC. 801 Cromwell Park Drive Suite 110 Glen Burnie, MD 21061	PROJECT TITLE: RESTROOM DESIGN STANDARDS		PROJECT NO. TASK 1314.20
	SHEET TITLE: TOILET PARTITIONS AND DOOR HARDWARE-20		B-20
	SCALE: NONE	DATE: MARCH 2005	